Helms & ASSOCIATES
CIVIL ENGINEERS & LAND SURVEYORS

221 Brown County Hwy 19
P.O. Box 111
Aberdeen, SD 57402

Phone: (605) 225-1212 Fax: (605) 225-3189
Email: operations@helmsengineering.com

July 11, 2017

Re: Runway 17/35 Construction
Redfield Municipal Airport
Redfield, South Dakota
AIP # 3-46-0049-011-2017
A-5918

Bid Opening: **July 13, 2017**
2:00 pm Local Time

ADDENDUM NUMBER 1

The following modifications are made to the plans and specifications for the Runway 17/35 Construction Project:

PLANS

1. Sheet 2, Project Layout Plan, delete in its entirety and replace with the attached sheet.
Identified the "Grading Limits"

2. Sheet 3, Construction Safety Phasing Plan Layout, Clarification: Gravel Surfacing for the Haul Route is to be considered incidental to the Contract. Earthwork is included and paid for under the Unclassified Excavation item. The 36" RCP is included in the quantity and paid for under the 36" RCP item.

3. Sheet 3, Construction Safety Phasing Plan Layout: Reference to Construct 10' High Wildlife Fence shall be revised to read Construct Barbed Wire Fence.

4. Sheet 14, Typical Sections Sheet, Alternate Taxiway Typical Paving Section, depth of P-154 Subbase Course shall be 27".

5. Sheet 15, Typical Sections Sheet, delete in its entirety and replace with the attached sheet.
Revised the thickness measurements for the joint details

6. Sheet 20, Runway 17/35 Plan Sheet (STA. 15+00 to STA. 20+50), delete in its entirety and replace with the attached sheet.
Labeled contours

7. Sheet 28, Runway 17/35 Plan Sheet (STA. 37+00 to STA. 42+44), Notes for 36" RCP, lengths shall be 306 L.F.

8. Sheet 29, Runway 17/35 Profile Sheet (STA. 37+00 to STA. 42+44), Notes for 36" RCP, lengths shall be 306 L.F.

9. Sheet 53, Typical Detail Sheet, delete in its entirety and replace with the attached sheet.
Modified the Underdrain Detail

10. Sheet 54, Typical Detail Sheet, delete in its entirety and replace with the attached sheet.
Added a "Reinforcement for Odd-Shaped Panels" Detail

CONTRACT DOCUMENTS AND TECHNICAL SPECIFICATIONS

1. Technical Specifications, Page 159, Item P-208 (MOD) Aggregate Base Course, 208-2.1 Aggregate Base Course, 3rd Paragraph, revise to read:

The coarse aggregate portion, defined as the portion retained on the No. 4 sieve, shall not have a loss of greater than 40% when tested per ASTM C131. ~~The sodium sulfate soundness loss shall not exceed 12%, or the magnesium sulfate soundness loss shall not exceed 18%, after five cycles, when tested in accordance with ASTM C88.~~ The aggregate shall have at least 30% ~~60%~~ by weight of particles with at least one or more ~~two~~ fractured faces ~~and 75% with at least one fractured face~~ per ASTM D5821. The area of each face shall be equal to at least 75% of the smallest mid-sectional area of the piece. When two fractured faces are contiguous, the angle between the planes of fractures shall be at least 30 degrees to count as two fractured faces. ~~The aggregate shall contain no more than 15%, by weight, of flat, elongated, or flat and elongated particles per ASTM D4791. A flat particle is one having a ratio of width to thickness greater than three (3); an elongated particle is one having a ratio of length to width greater than three (3).~~

2. Technical Specifications, Page 160, Item P-208 (MOD) Aggregate Base Course, 208-2.2.a, revise to read:

a. Sampling and testing for gradation. The Contractor shall take at least one ~~[two]~~ aggregate base sample~~s~~ per lot to check the final gradation. Sampling shall be per ASTM D75. The lot will be consistent with the lot size used for density. The samples shall be taken from the in-place, un-compacted material in the presence of the Engineer. Sampling points and intervals will be designated by the Engineer.

3. Contract Documents, Proposal, Page 476, delete in its entirety and replace with the attached page.
Bid Schedule C-added the item for "Construction Staking".

ALL OTHER ITEMS OF THE PLANS AND SPECIFICATIONS REMAIN UNCHANGED

Registered Professional Engineer REG. No. 11520 MICHAEL A. SCHMIT SOUTH DAKOTA

BY:_____

PROJECT ENGINEER – HELMS & ASSOCIATES

Acknowledge receipt of the Addendum by inserting its number on the Bid Form. Failure to do so may subject bidder to disqualification. This Addendum forms a part of the Contract Documents. It modifies them as above.

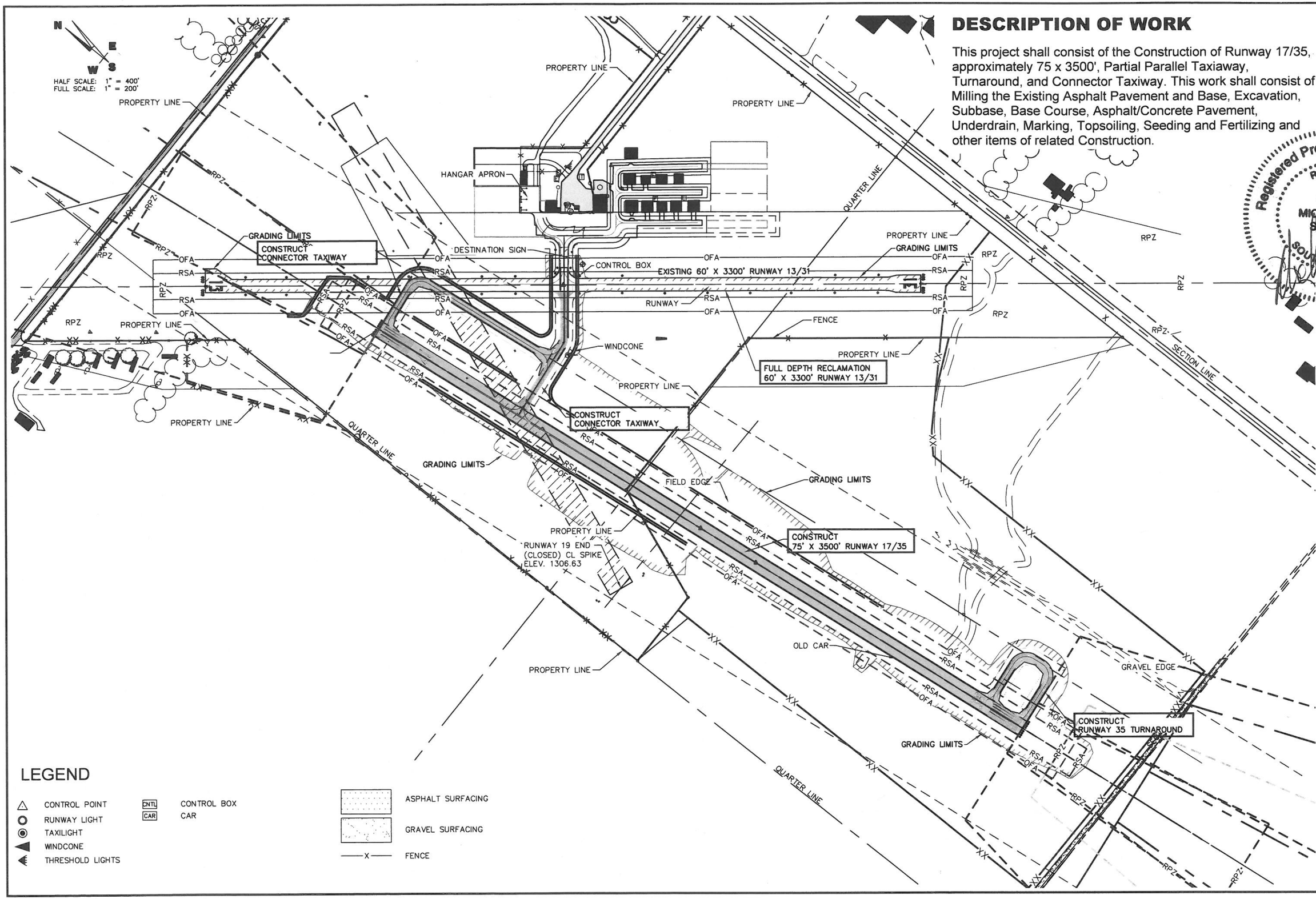

DESCRIPTION OF WORK

This project shall consist of the Construction of Runway 17/35, approximately 75 x 3500', Partial Parallel Taxiaway, Turnaround, and Connector Taxiway. This work shall consist of Milling the Existing Asphalt Pavement and Base, Excavation, Subbase, Base Course, Asphalt/Concrete Pavement, Underdrain, Marking, Topsoiling, Seeding and Fertilizing and other items of related Construction.

Registered Professional Engineer
REG. No. 11520
MICHAEL A. SCHMIT
SOUTH DAKOTA
7/11/17

Revisions	By	App.	Date
Addendum Revisions	CLB	MAS	7/17

Helms & ASSOCIATES
CIVIL ENGINEERS & LAND SURVEYORS
221 Brown County Highway 19
P.O. Box 111,
Aberdeen, S.D. 57401
Phone: 605.225.1212,
Fax: 605.225.3189
Email: terryh@helmsengineering.com

Drawn By: CLB
Chk' By: MAS
Proj. No: 4-5318 REDFIELD AIRPORT
Dwg. No: NEW
VP. No: PROJECTION PIT
Date: 11/3/14

PROJECT LAYOUT PLAN

RUNWAY 17/35 CONSTRUCTION
REDFIELD MUNICIPAL AIRPORT
REDFIELD, SOUTH DAKOTA

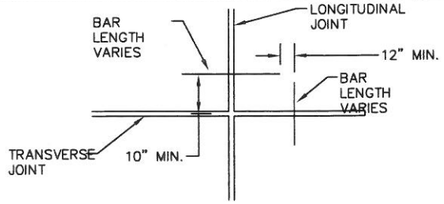

POSITION OF DOWELS AT EDGE OF JOINT
NO SCALE

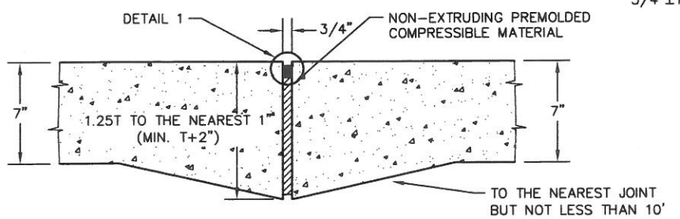

(A) THICKENED EDGE CONSTRUCTION JOINT
NO SCALE

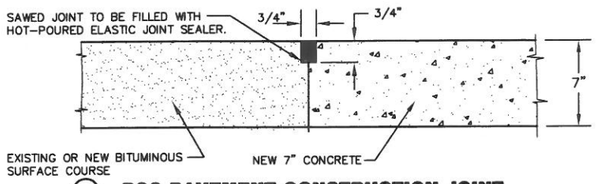

(B) PCC PAVEMENT CONSTRUCTION JOINT ADJACENT TO BITUMINOUS PAVEMENT
NO SCALE

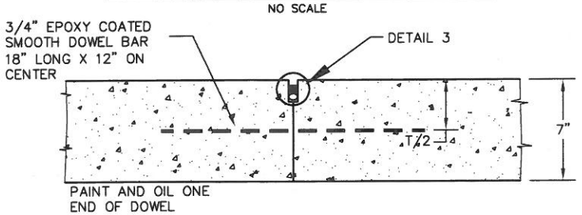

(C) LONGITUDINAL/TRANSVERSE CONSTRUCTION JOINT W/DOWEL BARS
NO SCALE

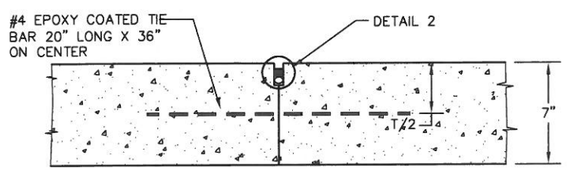

(D) LONGITUDINAL/TRANSVERSE CONTRACTION JOINT W/TIE BARS
NO SCALE

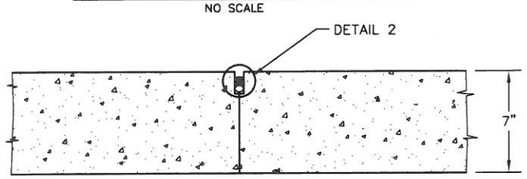

(E) DUMMY CONTRACTION JOINT
NO SCALE

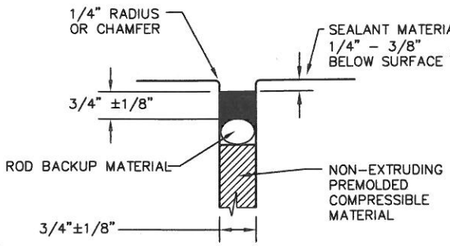

DETAIL 1 EXPANSION JOINT
NO SCALE

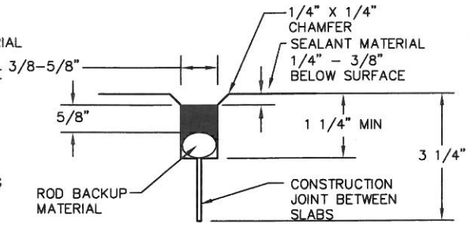

DETAIL 2 CONTRACTION JOINT
NO SCALE

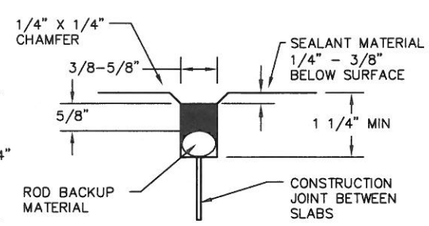

DETAIL 3 CONSTRUCTION JOINT
NO SCALE

NOTES:
1. ROD BACKUP MATERIAL MUST BE COMPATIBLE WITH THE SEALANT USED AND SIZED TO PROVIDE THE DESIRED SHAPE FACTOR.

2. RECESS SEALER 3/8" - 1/2" FOR JOINTS PERPENDICULAR TO RUNWAY GROOVES.

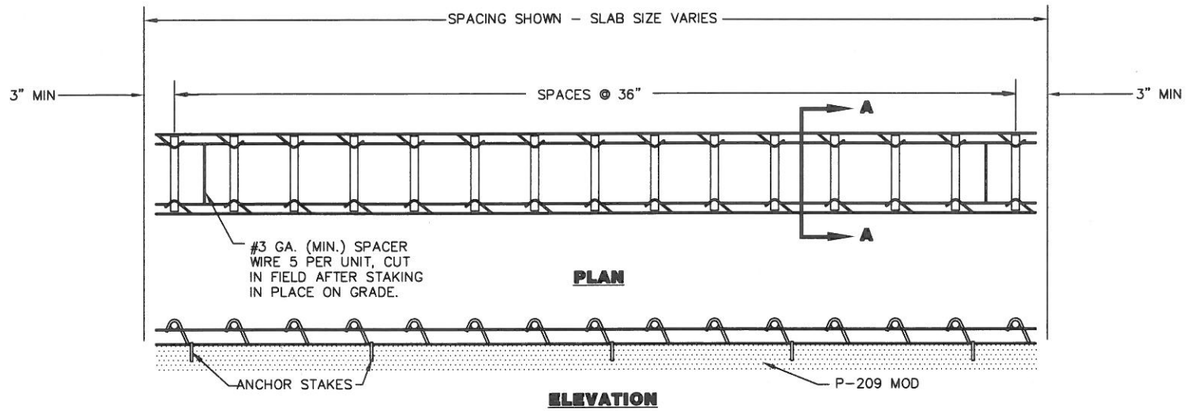

PLAN

ELEVATION

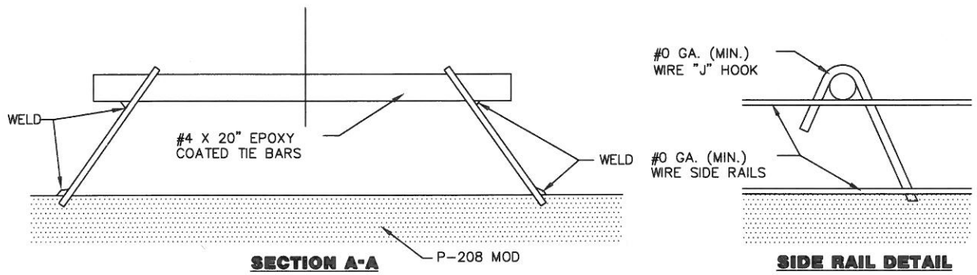

SECTION A-A

SIDE RAIL DETAIL

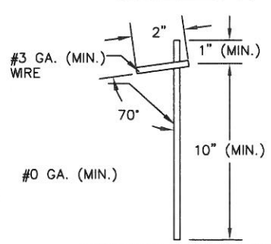

TYPICAL ANCHOR STAKE

CENTERLINE OF INDIVIDUAL TIE BARS SHALL BE PARALLEL TO TOP OF SUBGRADE ±1/8 INCH IN 20 INCHES AND TO ALL OTHER TIE BARS IN THE ASSEMBLY ±1/16 INCH IN 20 INCHES.

CENTERLINE OF INDIVIDUAL TIE BARS SHALL BE PARALLEL TO THE CENTERLINE OF THE RUNWAY ±1/2 INCH IN 20 INCHES.

THE TRANSVERSE CONTRACTION JOINTS SHALL BE SAWED PERPENDICULAR TO THE CENTERLINE OF THE RUNWAY AND THE TIE BARS SHALL BE CENTERED ON THE SAWED JOINTS ± 1 INCH.

THE LONGITUDINAL CONTRACTION JOINTS SHALL BE SAWED PARALLEL TO THE CENTERLINE OF THE RUNWAY AND THE TIE BARS SHALL BE CENTERED ON THE SAWED JOINTS ± 1 INCH.

SUPPORTING DEVICES OF THE TYPE SHOWN ON THIS SHEET, OR EQUIVAENT AS APPROVED BY THE ENGINEER, ARE TO BE USED TO MAINTAIN PROPER HORIZONTAL AND VERTICAL ALIGNMENT OF THE TIE BARS.

TIE BARS AND TIE BARS ASSEMBLIES SHALL BE CONSIDERED INCIDENTAL TO THE CONCRETE PAVING.

PCC PAVEMENT TIE BAR ASSEMBLY FOR LONGITUDINAL/TRANSVERSE CONTRACTION JOINTS
NO SCALE

Registered Professional Engineer
Reg. No. 15207
MICHAEL A. SCHMITT
I hereby certify that this specification was prepared by me or under my direct supervision and that I am a duly licensed Professional Engineer under the law of the State of South Dakota.
Registration No. 15207
7/11/17

No.	Description	Revisions	By	App.	Date
	QLB	MAS	7/17		

Helms & Associates
CIVIL ENGINEERS & LAND SURVEYORS
221 Brown County Highway 19
P.O. Box 111
Aberdeen, S.D. 57401
Phone: 605.225.1212
Fax: 605.225.3189
Email: terryb@helmsengineering.com

Drawn By: CLB
Chk' By: MAS
Proj. No: 4x8308
Dwg. No: NEW CONSTRUCTION
V.P. No: 4
Date: 11/3/14

TYPICAL SECTIONS SHEET

RUNWAY 17/35 CONSTRUCTION
REDFIELD MUNICIPAL AIRPORT
REDFIELD, SOUTH DAKOTA

BID SCHEDULE A
STA 15+00 L AND R TO
STA 20+50, L AND R
CONSTRUCT
4584 S.Y. OF 75' WIDE X 7"
THICK CONCRETE RUNWAY

BID SCHEDULE B
STA 15+00 L AND R TO
STA 20+50, L AND R
CONSTRUCT
4584 S.Y. OF 75' WIDE X 3"
THICK ASPHALT RUNWAY

N E S W

HALF SCALE: 1" = 40'
FULL SCALE: 1" = 20'

BID SCHEDULE A
STA 15+00 L AND R TO
STA 20+50, L AND R
CONSTRUCT
4584 S.Y. OF 75' WIDE X 7"
THICK CONCRETE RUNWAY

Registered Professional Engineer
REG. No. 11520
MICHAEL A. SCHMITT
SOUTH DAKOTA

I hereby certify that this plan, specification, or report was prepared by me or under my direct supervision and that I am a duly Licensed Professional Engineer under the laws of the State of South Dakota.
License No.

1303
1302
1301
1301.74
OFA
1301.61
10' WIDE DITCH @ GRADE 0.27%
8:1 SIDE SLOPE
UNDERDRAIN PIPING TO BE INSTALLED. SEE CONNECTOR TAXIWAY PLAN AND PROFILE FOR DETAILS.
401+00
TAXIWAY TO BE CONSTRUCTED
STA. 15+18.72, 89.6'L
1305.10
STA. 15+30.92, 48.98'L
1305.24
STA 16+00, 39.5' L
INSTALL UNDERDRAIN
CLEANOUT
STA. 15+69.12, 37.5'L
1306.02
50' @ SLOPE 16.67%
37.5' @ GRADE 3%
RSA
STA 19+50, 39.5' L
INSTALL UNDERDRAIN
CLEANOUT
UNDERDRAIN PIPING TO BE INSTALLED
150'
1306
37.50'
2%
12.5
400+00
15+00
16+00
17+00
18+00
19+00
20+00
75'
75' WIDE RUNWAY 17/35
STATION EQUATION
15+01.22, 0' LT =
400+00, 0' LT
STA 16+00, 39.5' R
INSTALL UNDERDRAIN
CLEANOUT
STA 19+50, 39.5' R
INSTALL UNDERDRAIN
CLEANOUT
1305
1304
1307
1302.83
10' WIDE DITCH @ GRADE 0.2%
10' WIDE DITCH @ GRADE 0.27%

(A) THICKENED EDGE CONSTRUCTION JOINT
(B) PCC PAVEMENT ADJACENT TO BITUMINOUS
(C) CONSTRUCTION JOINT W/DOWEL BARS
(D) CONTRACTION JOINT W/TIE BARS
(E) DUMMY CONTRACTION JOINT

Helms & Associates
CIVIL ENGINEERS & LAND SURVEYORS
221 Brown County
Highway 19
P.O. Box 111
Aberdeen, S.D. 57401
Phone: 605.225.1212
Fax: 605.225.3189
Email: terryh@helmsengineering.com

Drawn By: CLB
Chk' By: MAS
Proj. No: A-3(50)151
Dwg. No: NEW
VP. No: PP-151(UCT)N
Date: 11/3/14

RUNWAY 17/35 PLAN SHEET
STA. 15+00 TO STA. 20+50

RUNWAY 17/35 CONSTRUCTION
REDFIELD MUNICIPAL AIRPORT
REDFIELD, SOUTH DAKOTA

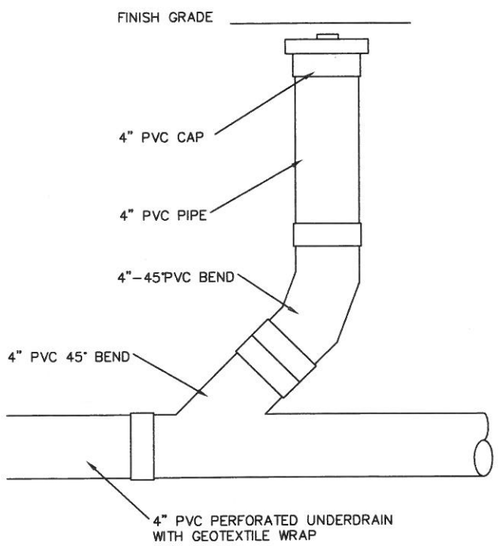

SIDE VIEW

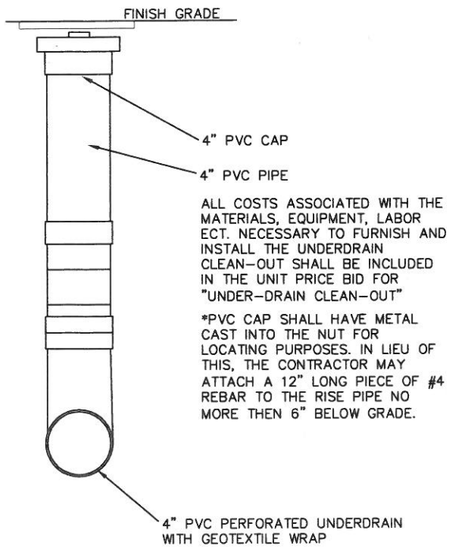

FRONT VIEW

ALL COSTS ASSOCIATED WITH THE MATERIALS, EQUIPMENT, LABOR ECT. NECESSARY TO FURNISH AND INSTALL THE UNDERDRAIN CLEAN-OUT SHALL BE INCLUDED IN THE UNIT PRICE BID FOR "UNDER-DRAIN CLEAN-OUT"

*PVC CAP SHALL HAVE METAL CAST INTO THE NUT FOR LOCATING PURPOSES. IN LIEU OF THIS, THE CONTRACTOR MAY ATTACH A 12" LONG PIECE OF #4 REBAR TO THE RISE PIPE NO MORE THEN 6" BELOW GRADE.

UNDERDRAIN CLEAN-OUT

NO SCALE

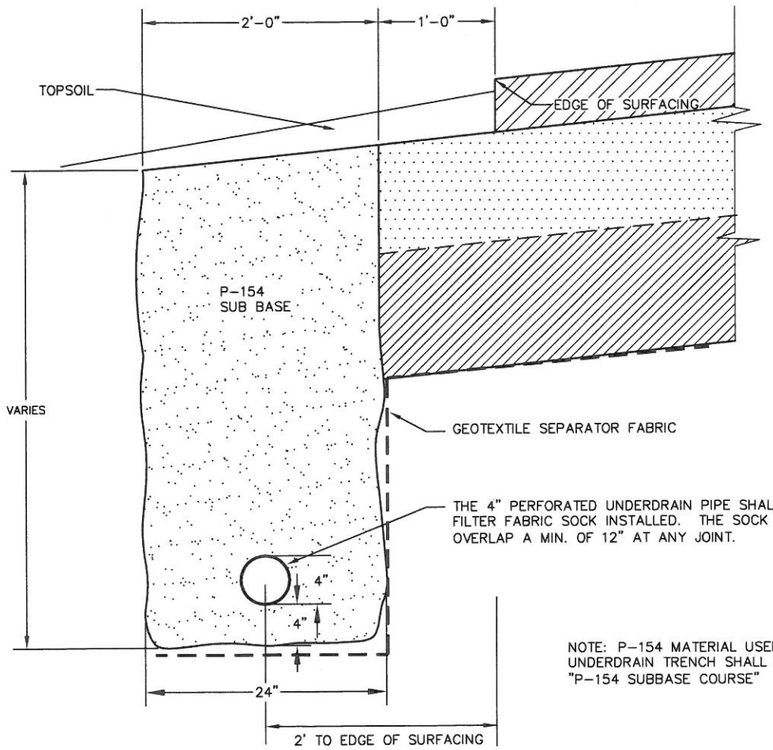

NOTE: P-154 MATERIAL USED TO BACKFILL UNDERDRAIN TRENCH SHALL BE PAID FOR AS "P-154 SUBBASE COURSE"

UNDERDRAIN DETAIL

NO SCALE

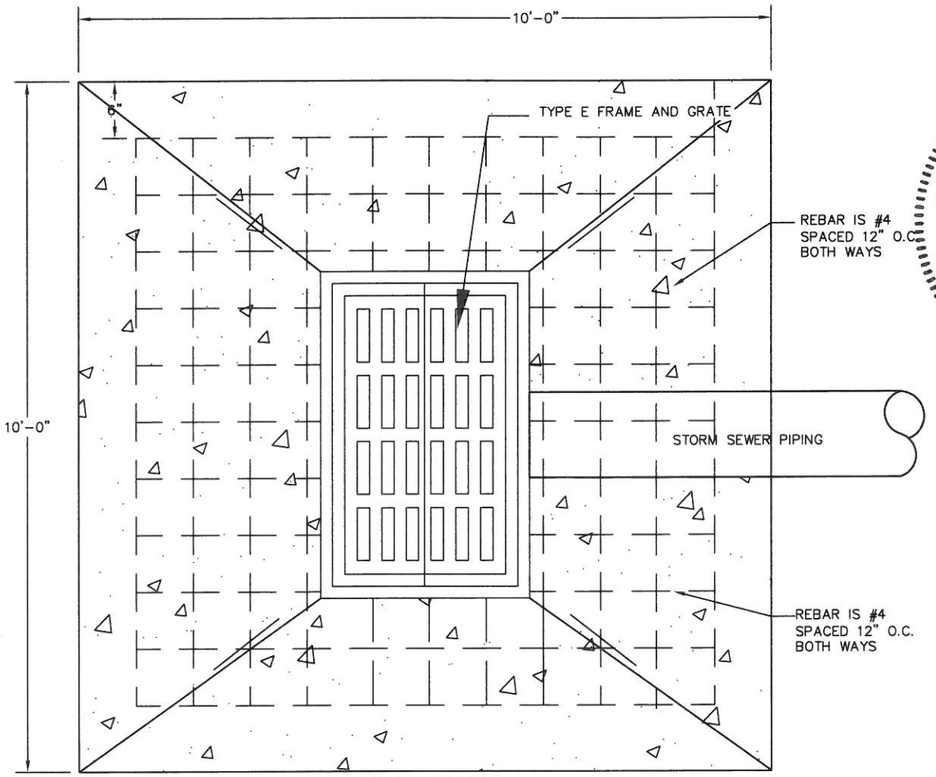

PLAN VIEW

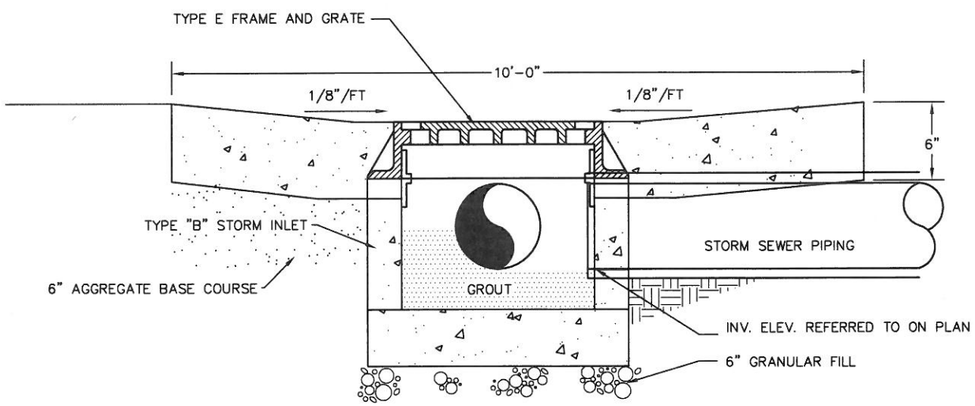

ELEVATION VIEW

2' X 3' STORM SEWER INLET W / APRON

NO SCALE

Registered Professional Engineer
REG. No.
11520
MICHAEL A. SCHAEFER
SOUTH DAKOTA
I hereby certify that this plan, specification, or report was prepared by me or under my direct supervision and that I am a duly Registered Professional Engineer under the laws of the State of South Dakota.
7/11/17

Helms & ASSOCIATES
CIVIL ENGINEERS & LAND SURVEYORS
221 Brown County Highway 19
P.O. Box 111,
Aberdeen, S.D. 57401
Phone: 605.225.1212,
Fax: 605.225.3189
Email: terryh@helmsengineering.com

By	App.	Date	Revisions

Drawn By: CLB
Chk' By: MAS
Proj. No: 4-53-0(8)FIELD
3-46-0(8)FIELD
Dwg. No: NEW
VP. No: CONSTRUCTION
Date: 11/3/14

TYPICAL DETAIL SHEET

RUNWAY 17/35 CONSTRUCTION
REDFIELD MUNICIPAL AIRPORT
REDFIELD, SOUTH DAKOTA

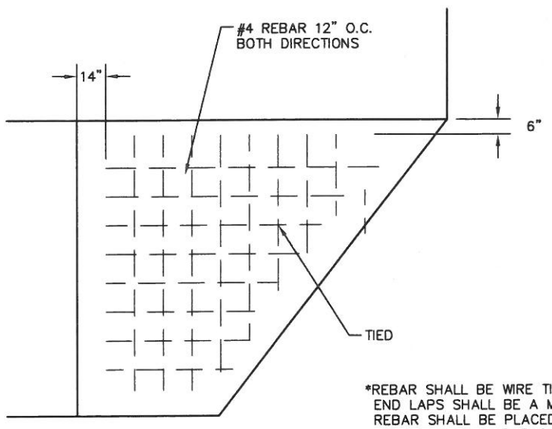

*REBAR SHALL BE WIRE TIED TOGETHER AT JOINTS. END LAPS SHALL BE A MINIMUM OF 15 INCHES. REBAR SHALL BE PLACED ON APPROVED CHAIRS AND FIXTURES SO THAT IT IS HELD IN THE MIDDLE OF THE SLAB WHEN POURED.

ODD SHAPED PANEL REINFORCEMENT DETAIL

NO SCALE

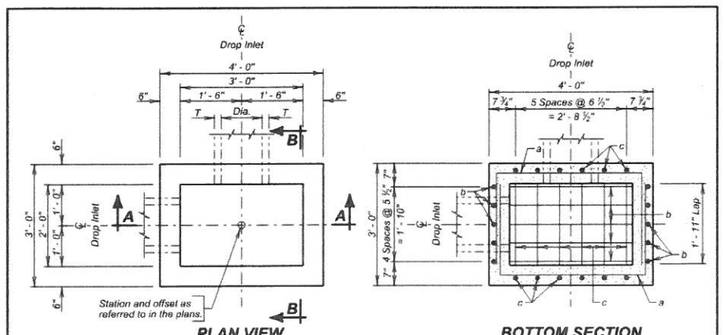

ESTIMATED QUANTITIES			
ITEM	UNIT	CONSTANT QUANTITY	VARIABLE QUANTITY
✳ Class M6 Concrete	Cu. Yd.	0.26	0.22H
Reinforcing Steel	Lb	83.03	28.97H
Frame and Grate Assembly	Each	1	———

DROP INLETS FOR 12" TO 24" DIAMETER PIPE

SPECIFICATIONS

Design Specifications: AASHTO LRFD Bridge Design Specifications, 2012 Edition.

Construction Specifications: South Dakota Standard Specifications for Roads and Bridges, Current Edition and required Provisions, Supplemental Specifications, and Special Provisions as included in the Proposal.

GENERAL NOTES:

Design Live Load: HL-93. No construction loading in excess of legal load was considered.

Reinforcing steel shall conform to ASTM A615 grade 60. The d bars shall be lapped 12 inches with the b and c bars. Cut and bend reinforcing steel as required to place pipe(s) through the drop inlet wall.

Drop inlet may be precast. If precast drop inlet details differ from this standard plate, submit a checked design done by a SD registered P.E. and shop plans to the Office of Bridge Design for approval.

✳ Reduce total quantities of concrete by the amount of concrete displaced by the pipe(s). The total quantity of concrete shall be computed to the nearest hundredth of a cubic yard. The total quantity of reinforcing steel shall be computed to the nearest pound.

Drop inlet shown may be modified by the addition or omission of connecting pipes as noted elsewhere in the plans. All pipes entering drop inlet must fit between the inside face of walls and shall not enter through the corners.

Maximum R.C.P. diameter shall not exceed 18 inches on the 2-foot wide side and shall not exceed 24 inches (24 inches for R.C. arch) on the 3-foot wide side of the drop inlet.

The dimension of H is in feet. Maximum H is 10 feet.

PIPE DISPLACEMENT REDUCTIONS			
	Diameter (Inches)	Wall T (Inches)	Class M6 Concrete (Cu. Yd.)
R.C.P.	12	2	0.03
	15	2 ¼	0.04
	18	2 ½	0.05
	24	3	0.09
R.C. ARCH	18	2 ½	0.05
	24	3 ½	0.09

December 16, 2015

Published Date: 1st Qtr. 2017 | SDDOT | 2'X 3' TYPE B REINFORCED CONCRETE DROP INLET | PLATE NUMBER 670.01 | Sheet 1 of 2

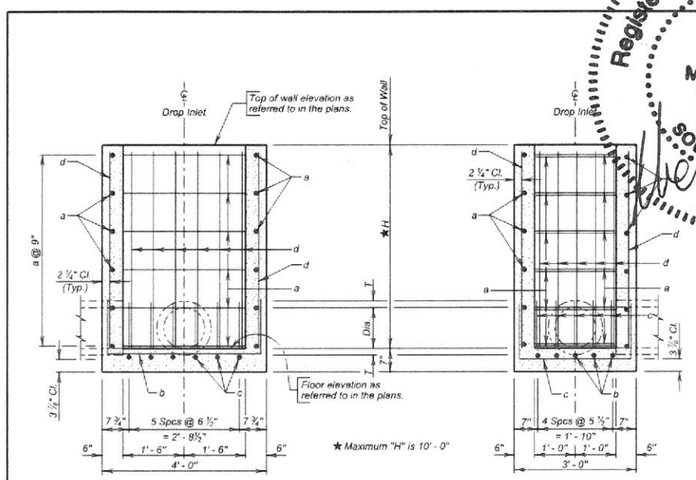

REINFORCING SCHEDULE					
Mk.	No.	Size	Length	Type	Bending Details
a	2.67H	4	8' - 0"	17	
b	5	5	6' - 3"	17	
c	6	4	5' - 3"	17	
d	22	4	H - 2"	Str.	

NOTE:
All dimensions are out to out of bars.

Type 17

a	2' - 2 ½"
b	1' - 3 ½"
c	1' - 3 ½"

December 16, 2015

Published Date: 1st Qtr. 2017 | SDDOT | 2'X 3' TYPE B REINFORCED CONCRETE DROP INLET | PLATE NUMBER 670.01 | Sheet 2 of 2

Registered Professional Engineer — REG. No. 11520 — MICHAEL A. SCHMITT — SOUTH DAKOTA — 7/11/17

I hereby certify that this plan, specification, or report was prepared by me or under my direct supervision and that I am a duly Licensed Professional Engineer under the law of the State of South Dakota. License/Registration No.

No.	Revisions	By	App.	Date

Helms & Associates
CIVIL ENGINEERS & LAND SURVEYORS
221 Brown County Highway 19
P.O. Box 111,
Aberdeen, S.D. 57401
Phone: 605.225.1212,
Fax: 605.225.3189
Email: terry@helmsengineering.com

Drawn By: CLB
Chk' By: MAS
Proj. No: 4x3346 (REDFIELD AIRPORT)
Dwg. No: NEW
VF. No: PROJECT
Date: 11/3/14

TYPICAL DETAIL SHEET

RUNWAY 17/35 CONSTRUCTION
REDFIELD MUNICIPAL AIRPORT
REDFIELD, SOUTH DAKOTA

Bid Schedule C - Electrical

Item No.	Spec No.	Item Description	Quantity	Unit	Unit Price	Total Price
1	GP-105	Mobilization	1	L.S.	$	$
2	GP-50	Construction Staking	1	L.S.	$	$
3	S-100	Construction Safety Phasing Plan	1	L.S.	$	$
4	L-100-5.1	Demolition, Incidental Electrical	1	L.S.	$	$
5	L-101-5.1	L-810 Airport Rotating Beacon System	1	Each	$	$
6	L-107-5.1	Lighted LED L-807 Windcone with Footing, Complete	1	Each	$	$
7	L-107-5.2	100' Diameter Segmented Circle, Complete	1	Each	$	$
8	L-108-5.1	Underground Cable, 1/C #8 L-824C, 5kV Cable in Conduit	9,950	Ft	$	$
9	L-108-5.2	Underground Cable, 1/C #6 L-824C, 600V Cable in Conduit	15,500	Ft	$	$
10	L-108-5.3	Underground Cable, 1/C #10 L-824C, 600V Cable in Conduit	5,875	Ft	$	$
11	L-108-5.4	#6 Bare CU Counterpoise in Trench or Plowed in (Includes Trenching or Plowing)	7,500	Ft	$	$
12	L-109-5.1	Airport Electrical Room Equipment and Installation, Complete	1	L.S.	$	$
13	L-110-5.1	Trench and Backfill for Conduit	14,500	Ft	$	$
14	L-110-5.2	1-Way 2" PVC Conduit in Trench	14,500	Ft	$	$
15	L-110-5.4	1-Way 2" PVC Conduit Bored Under Existing Surface	450	Ft	$	$
16	L-115-5.1	Electrical Pullbox 24" (L-867 Can), Complete	7	Each	$	$
17	L-115-5.2	Electrical Junction Manhole, Complete	9	Each	$	$
18	L-125-5.1	Medium Intensity Runway Light (MIRL), Base Mount Type, Complete	32	Each	$	$
19	L-125-5.2	Medium Intensity Threshold Light (MIRL), Base Mount Type, Complete	16	Each	$	$
20	L-125-5.3	Medium Intensity LED Taxiway Light (MITL), Base Mount Type, Complete with Arctic Kit	26	Each	$	$
21	L-125-5.4	L-853 Taxiway Reflective Marker	65	Each	$	$
22	L-340-5.1	L-881 PAPI System, Complete with Transformers	2	Each	$	$
23	L-125-5.1	Medium Intensity Runway Light (MIRL), Coupling Stem and Light for Spare Parts Stock	2	Each	$	$
24	L-125-5.3	Medium Intensity LED Taxiway Light (MITL), Coupling Stem and Light for Spare Parts Stock	5	Each	$	$
25		Frangible Couplings for Spare Parts Stock	8	Each	$	$

Subtotal Bid Schedule C items 1 – 25 inclusive $_____

Written: _____

_____ Dollars

All Items Furnished and Installed

*For Bid Schedule C, Unit Prices will govern where used. Incorrect extensions or totals will be corrected and the corrected figures will be used in determining the low bidder. Final contract amount after construction will be determined based upon final quantities and unit price.

Addendum No. E-1
To Electrical Plans and Specifications:
Redfield Municipal Airport
Runway 17/35 Construction
Redfield, South Dakota
AIP# 3-46-0049-011-2017

Addendum Dated: July 11, 2017
Original Plans & Specifications Dated: June 20, 2017

SCOPE OF THIS ADDENDUM: The following becomes a part of the original plans and specifications, taking precedence over the items that may conflict. The bidder shall note receipt and make acknowledgement of the addendum on his bid form, incorporating its provision in his bid.

PLAN AND SPECIFICATION CHANGES AND CLARIFICATIONS:

1. Bid Item #4, Sheet E6. Item should be L-801 and not L-810.
2. Bid Item #15, Sheet E6. The 24" dimension is the depth of can. Size D on sheet E27 is correct for diameter of 16".
3. Bid Item #17 & #18, Sheet E6. These lights will be quartz lamps.
4. Bid Item #19, Sheet E6. These lights are LED with Arctic Kits.
5. Bid Item #21, Sheet E6. PAPI system shall be Type L-881, two box with only two lamps per box.
6. Follow runway lighting lens color as detailed on the plan sheets for each light location.
7. Sheet E26, L-853 Taxiway Retroreflective Marker Detail. These shall be stake mounted and NOT have vegetation control rings.
8. Sheet E30, Wind cone base shall be 36" in diameter.
9. See attached supplemental drawing on segmented circle construction.
10. Add bid item for construction staking of all light fixtures.

APPROVED EQUALS:
The following list of equipment manufacturer's shall be added to the approved equals listed on the plan sheet schedules, and considered as approved equals subject to meeting all requirements of the plans and specifications – final acceptance subject to shop drawing approval.

1. NONE

Blake Woodward, P.E.
Mettler Sichmeller Engineering
(605) 225-4344

Attachments: Addendum E1 Segmented Circle

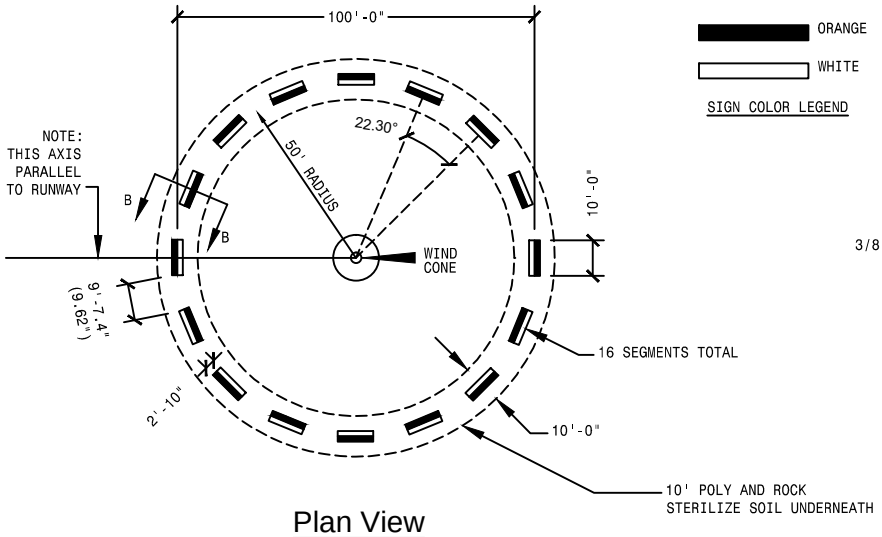

Plan View
NTS

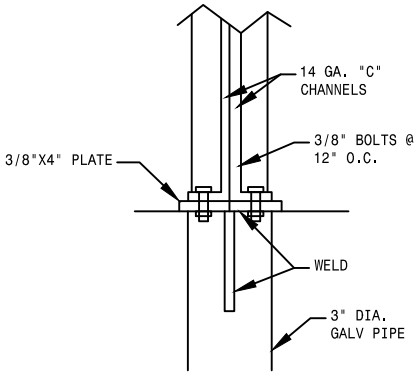

Connection Detail
NTS

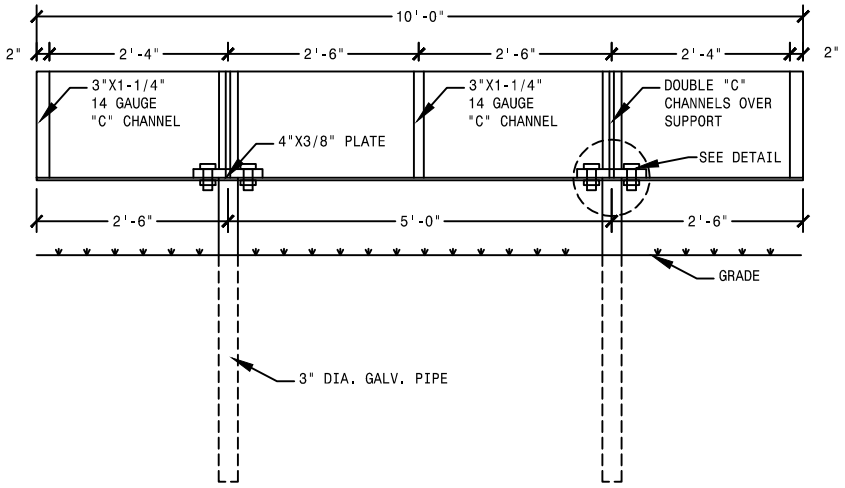

Section A-A
NTS

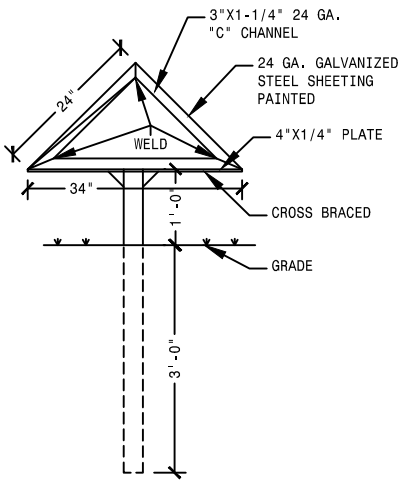

Section B-B
NTS

SEGMENTED CIRCLE
NTS

REGISTERED PROFESSIONAL ENGINEER
REG. NO.
12068
BLAKE A.
WOODWARD
SOUTH DAKOTA
Blake Woodward
7-10-17

METTLER SICHMELLER ENGINEERING Electrical and Mechanical Engineering	REVISED DATE: -	**Runway 17-35 Construction Redfield Municipal Airport** **Redfield, South Dakota**	**Addendum E1** **Segmented Circle**	DRAWN BY: DK TRACED BY: - CHECKED BY: BW DATE: 07/10/17
	CERT. NO.: C-1257			1 OF-1 PROJECT NO.: 170300546E
	801 Railroad Ave. SE, Aberdeen, S.D. / Phone: 605-225-4344 / Fax: 605-225-8706			